Digital External Micrometer

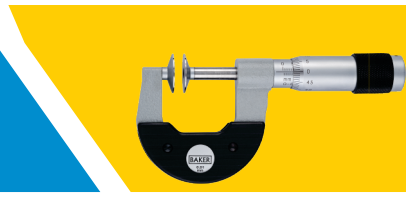

RANGE 0-100 mm/0-4”

DMM25

4DMM100
SET OF 4 DIGITAL MICROMETERS (0-100 mm/0-4”)

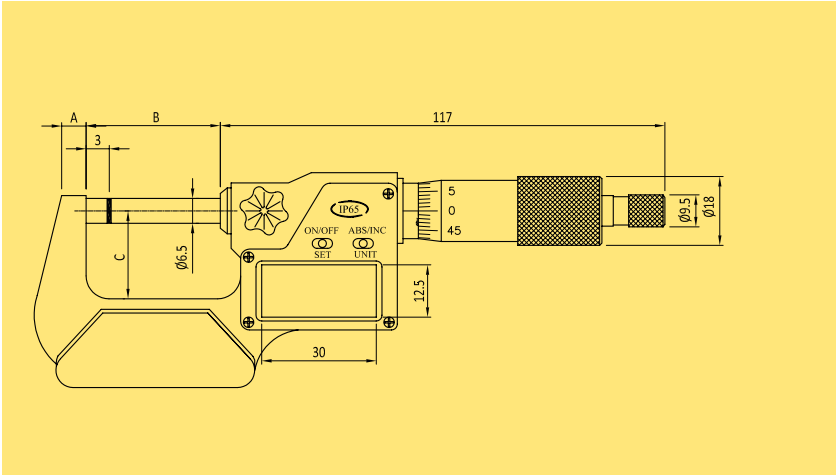

FEATURES

- Protection level IP65 against dust & water (coolant proof)
- Stainless steel spindle to avoid rust
- Carbide measuring faces
- mm / inch conversion
- Auto power off
- SR44/LR44 battery
- Ball attachment free of cost
- Absolute & incremental measuring mode
- Easy operations with 2 buttons
- Each micrometer is supplied with calibration certificate stating actual values
- Supplied in attractive sturdy box
- Real value for money

MEASURING RANGE	READING	TYPE	A mm	B mm	C mm
0-25mm/0-1”	0.001 mm / 0.00005”	DMM25	6.5	31	25
25-50mm/1-2”		DMM50	8.5	56	32
50-75mm/2-3”		DMM75	8.5	81.5	44.5
75-100mm/3-4”		DMM100	8.5	106	57
Set of Micrometers					
0-100mm/0-4" (Set of 4)	0.001 mm/ 0.00005”	4DMM100			